City of Bangor

BUTTERFLY VALVE REPLACEMENT AT KENDUSKEAG PUMP STATION AND WASTEWATER TREATMENT PLANT

Addendum No. 1

August 5, 2016

To All Plan Holders:

The following changes, additions and/ or deletions are hereby made a part of the Bidding Documents for the **BUTTERFLY VALVE REPLACEMENT AT KENDUSKEAG PUMP STATION AND WASTEWATER TREATMENT PLANT,** July 2016, as fully and completed as if same were fully set forth therein:

Attachments

The following information is attached as part of this addendum:
1. Pre-Bid Meeting Minutes from July 27, 2016
2. Contract Questions and Answers
3. PreBid Meeting Attendee List
4. Maps of selected portions of sewer collection system infrastructure
5. Data for existing KPS Butterfly Valve

All other provisions of the Bidding Documents remain the same.

All Bidders shall acknowledge receipt and acceptance of this Addendum No. 1 by signing the acknowledgement of addendum form at the end of the Proposal Form. Bids submitted without acknowledgement of this Addendum shall be considered informal.

Butterfly Valve Replacement at Kenduskeag Pump Station and Wastewater Treatment Plant
PreBid Meeting Minutes

Wednesday, July 27, 2016 9:00 a.m.

<u>Comments City of Bangor</u>

- Team Roles: The project was designed by AECOM. AECOM and the WWTP staff will be the main contacts throughout the project, and City of Bangor Engineering will assist with the contract administration.

- Project Description: Removing and replacing an existing Butterfly Valve at the Kenduskeag Pump Station (KPS) and replacing an actuator valve on the existing Butterfly Valve at the Wastewater Treatment Plant (WWTP). The work includes electrical demolition, electrical work and wiring, and testing.

- The WWTP would like to keep the valve removed from KPS to salvage parts. The contractor will be required to deliver the valve to the WWTP after removal.

- Work needs to be completed during dry weather, off peak hours and will require maintenance of existing flows and operations. The peak capacity of the WWTP is 43 MGD and the Kenduskeag Pump Station takes flow from about 2/3 of the City. The average dry weather daily flow to the WWTP is 8 million gallons per day (MGD). The daily off peak lowest flow period is generally between 3:00 a.m. and 9:00 a.m. Typical flow rates during this time range from 2 to 3 MGD. The City of Bangor's sewer collection system is combined and is subject to large variations in flow due to precipitation, snow melt, and high tide (inflow) or changes in seasonal groundwater levels (infiltration). During extreme high tides accompanied by precipitation and/or heavy wind, the KPS or WWTP may flood.

- The method and operations required to manage flows during the work will be the Contractor's responsibility. The City's collection system contains 3 one-million gallon storage tanks, one of which is upstream of the KPS and the other two of which are in close proximity and located upstream of the WWTP. There is the possibility of utilizing existing facilities to store flows for short periods of time while there is low flow in the collection system. The Contractor may work with WWTP staff to utilize existing facilities as part of their flow management plan. For more information on existing facilities, refer to the questions and answers and selected maps (attached).

- Director stressed the importance of having parts and tools on hand to minimize downtime during the valve work.

- Site Access & Working Hours: The WWTP's normal business hours are between 6:00 a.m. and 3:00 p.m. A WWTP staff member or inspector must be present during work. The WWTP will make arrangements to provide staff members to accommodate the Contractor's working hours, 24 hours if necessary, as long as arranged in advance.

- Safety: Representatives of contractors and subcontractors must agree to meet with the Safety Officer for the WWTP prior to being allowed to work at the site. All contractors and subcontractors agree to follow City of Bangor WWTP Safety Policies or present for approval by the City alternate policies that are equal to or more protective of worker health & safety. Any bidders who wish to examine the City's safety policies, including those regarding lockout/tagout and confined spaces, may contact Amanda Smith at 207-992-4471.

- All contractors and subcontractors are hereby notified that the City of Bangor has entered into a Consent Decree with the United States and the State of Maine. For the purposes of the Consent Decree, contractors and subcontractors are deemed agents of the City. Any and all work performed by contractors and subcontractors must conform with the terms of the Consent Decree. Contractors must familiarize themselves with the contents of the document and must make the document available to all subcontractors. This document is available electronically at http://www.bangormaine.gov/filestorage/318/350/7758/ENV_ENFORCEMENT.PDF or in hard-copy in the City of Bangor's Engineering Department.

Housekeeping

- Maintenance of existing treatment plant processes and system flows.

- General cleaning of work area at completion of each shift.

Environmental and Permitting

- Contractor will be responsible for disposing of materials and obtaining any permits needed for project.

- City will notify DEP of work being done prior to beginning of project.

Funding

- Locally funded, no special funding requirements

Timeline

- Bid Opening: **Wednesday, August 10, 2016, 2:00 p.m. at City Hall, Council Chambers**

- All questions must be submitted in writing to bids@bangormaine.gov, no later than Wednesday, August 3, at 4:30 p.m. All questions and answers will be issued in the form of an addendum which will be posted to the City's Bids and Proposals webpage at www.bangormaine.gov and distributed to plan holders, attendees, or other inquirers.

- Completion Date: February 28, 2017

Onsite Meeting:

Attendees were invited to visit the site with Engineering and WWTP staff to examine existing conditions immediately following the prebid meeting. Any bidders who wish to visit the site or examine plans of existing infrastructure on file may contact John Zachary at 207-992-4484.

Contract Q & A:

For a complete listing of all questions received during the pre-bid meeting and bidding period, see Contract Questions and Answers, included in the Attachments to Addendum No. 1.

Butterfly Valve Replacement at Kenduskeag Pump Station and Wastewater Treatment Plant Project
Contract Questions and Answers

1. What are the off peak hours? How long can bypassing of flows occur?
The off peak hours are between 3:00 a.m. and 9:00 a.m. The WWTP estimates that it would take a few days under normal working conditions, off peak hours, to complete the installation at KPS. There is limited capacity within the collection system to store flows under low flow conditions. However if conditions change and flows increase the capacity to store flows will greatly diminish.

2. Who is responsible for maintaining flows? What is available for in system equipment to deal with flows? Where are the closest upstream and downstream connection points for bypass pumping?
The responsibility of maintaining existing flows during the work lies with the Contractor. WWTP staff may be able to assist with operating existing facilities in a limited capacity. The Contractor will need to submit a flow management plan prior to beginning work.

If bypass pumping is the preferred method for handling flows, the shortest run would be to pump from the manhole outside of the KPS building door and discharge into the concrete channel inside the pump station building downstream of the butterfly valve.

3. Who is purchasing the valve? How soon can work begin after bids open? Is there a submittal process? How long does that take?
The Contractor will purchase all equipment under this contract. After bids open, recommendations for award go before Finance Committee and City Council, who approve the award. Following this, contracts are signed, a preconstruction meeting is held, and the contractor mobilizes. Generally, it is about a month from the date bids are opened to the date work begins, give or take a few days. Submittals will be required as part of this project. Submittals can be reviewed as soon as the contract is signed. For equipment submittals, it generally takes 1-2 weeks to review them and return them to the Contractor.

4. Does the WWTP want to salvage any parts?
The Contractor will need to deliver the equipment removed from KPS to the WWTP after the contractor has cleaned the valve for salvage by WWTP staff.

5. Is the sewer collection system more sensitive to inflow or infiltration?
Both, however inflow is not seasonal. Infiltration rates may differ depending on the seasonal groundwater levels.

6. Can you provide volumes and locations of CSO tanks?
The City has 3 CSO storage tanks which are used during periods of high flow to store flows in the system and release them to the WWTP after the flow event has subsided to minimize the frequency and volume of CSO overflows. If the tanks become full during wet weather and wet weather continues, the tanks overflow through licensed CSO points into waterways. These are in use during dry weather, low flows

flow through the tank through v-bottom channels in the bottom of the tanks. They are approximately 1 million gallons each. Please refer to the attached maps for locations of CSO storage tanks. Please note only one of them is upstream of KPS. Please note that overflows from the tanks not associated with wet weather are a violation of the City's MEPDES permit and will not be allowed.

7. What is the flow during the off peak hours?
During dry weather off peak hours, which are generally between 3:00 a.m. and 9:00 a.m., flow rates are generally in the range of 2-3 MGD.

8. What is the engineer's estimate?
The engineer's preliminary design construction estimate was $50,000.

9. Do you have a submittal, cut sheet, or drawing of the existing valves and actuators at the KPS?
Please see attached shop drawings.

10. Do you have a drawing of the KPS west valve house showing the piping, manholes, and valves?
Please contact John Zachary at 207-992-4484 to examine plans on file at the WWTP.

11. Do you have a drawing or pictures of the existing valve flange connection at the KPS, specifically access to the bolts and what kind they are?
Please see attached shop drawings.

12. Can the existing electrical conduit above the valve on the wall at the WWTP be replaced or does it need to be reused?
Per specification 16050.1.01.C "Reuse existing raceways only when found in excellent condition **and** when approved by the Owner and/or Engineer."

13. If the procurement of the valves makes meeting the completion date unfeasible, will the LD [liquidated damages] still apply? Or do we have to pay more to expedite the valve and actuator?
Liquidated damages will not be assessed if the Contractor has taken every reasonable effort to procure the valves in a timely manner to meet the specified completion date. In the event that a bidder foresees the need to expedite procurement of the valves and actuators to meet the specified completion date any additional fees shall be reflected in the bid price and the Contractor shall not receive additional compensation.

14. Currently at the Bangor WWTP facility the existing Butterfly valve is being powered by a single phase power panel that is located one elevation below the electric room that has Generator backup power tied to it. Does the new Butterfly valve require backup power in case of power failure?
The contractor should maintain connections to the existing valve to the extent it does not interfere with the work and make any reconnections upon completion of the work as necessary.

15. Are the new conduit raceways to be Galvanized Rigid Conduit or PVC coated Rigid Conduit "Rob Roy"?
The Contractor is to install PVC coated rigid conduit at least from the actuators through the upper screen rooms and then galvanized rigid conduit in the electrical room.

16. Is it acceptable to reuse existing raceways where applicable?
Per specification 16050.1.01.C "Reuse existing raceways only when found in excellent condition **and** when approved by the Owner and/or Engineer."

17. Please provide additional information on testing requirements (i.e. Electrical function testing? Pressure testing?)
The valves are to be tested for leaks with influent sewer surcharged from upstream manhole at levels to be determined by the Owner and Engineer. The WWTP will provide test parameters to confirm functionality at maximum expected flow rates and through the range of all control functions.

18. Please provide a planholders list and prebid meeting attendee list.
Planholders as of 8/3/2016 are Methuen Construction, Sullivan and Merrit, T. Buck Construction, and Eastwood Contractors. Please refer to the attachments to the addendum for a copy of the prebid meeting attendee list.

19. The only electric motor actuator manufacturer listed in the specifications is Rotork (p. 15109-5). Are there any other manufacturers that will be considered?
No.

20. Can you provide any information from or data off of the old actuator or original torque valves for the valve at the WWTP such as the manufacturer or model number?
Please refer to the shop drawings included for the equipment at KPS.

21. How much space is available for a laydown area at KPS?
The parcel that the KPS is located on is shown on the attached GIS map. The City also owns a parking lot immediately north of KPS across Washington Street and a park area immediately south of the KPS parcel. The contractor may request permission from the City to utilize these areas if desired. Use of these areas may need to be coordinated around City events on occasion.

WWTP AND KPS BUTTERFLY VALVE REPLACEMENT PROJECT

Pre Bid Meeting: July 27, 2016 9:00 a.m.

	Attendee Name:	Organization	Phone:	Fax:	Email:
1	HUGH SPURWAY	METHUEN CONSTRUCTION	(781) 424-2752	(603) 338-2233	estimating@methuenconstruction.com
2	Willy Lucas for Mark McPeters	T-Buck Const.	(207) 783-6223		mark@tbuckcon.net
3	GARY PERRY	Sullivan & Merritt	(207)-848-5788	(207) 848-3262	gperry@SMCINC.NET
4	JEFF BEERS	CITY OF BANGOR, ENGR	207 356 2471		jeff.beers@bangormaine.gov
5	Amanda Soucier	City of Bangor, Eng.	(207) 992-4244		amanda.soucier@bangormaine.gov
6	Amanda Smith	Pretreatment Coordinator			amanda.smith@bangormaine.gov
7	John Zachary	City of Bangor WWTP	992-4484		John.Zachary@bangormaine.gov
8	Andrew Rudzinski	City of Bangor Water Dept	992-4477		~~Andrew~~ Andy.Rudzinski@bangormaine.gov
9					
10					
11					
12					
13					
14					
15					

CITY OF BANGOR
SELECTED SEWER COLLECTION SYSTEM INFRASTRUCTURE
KENDUSKEAG PUMP STATION AREA

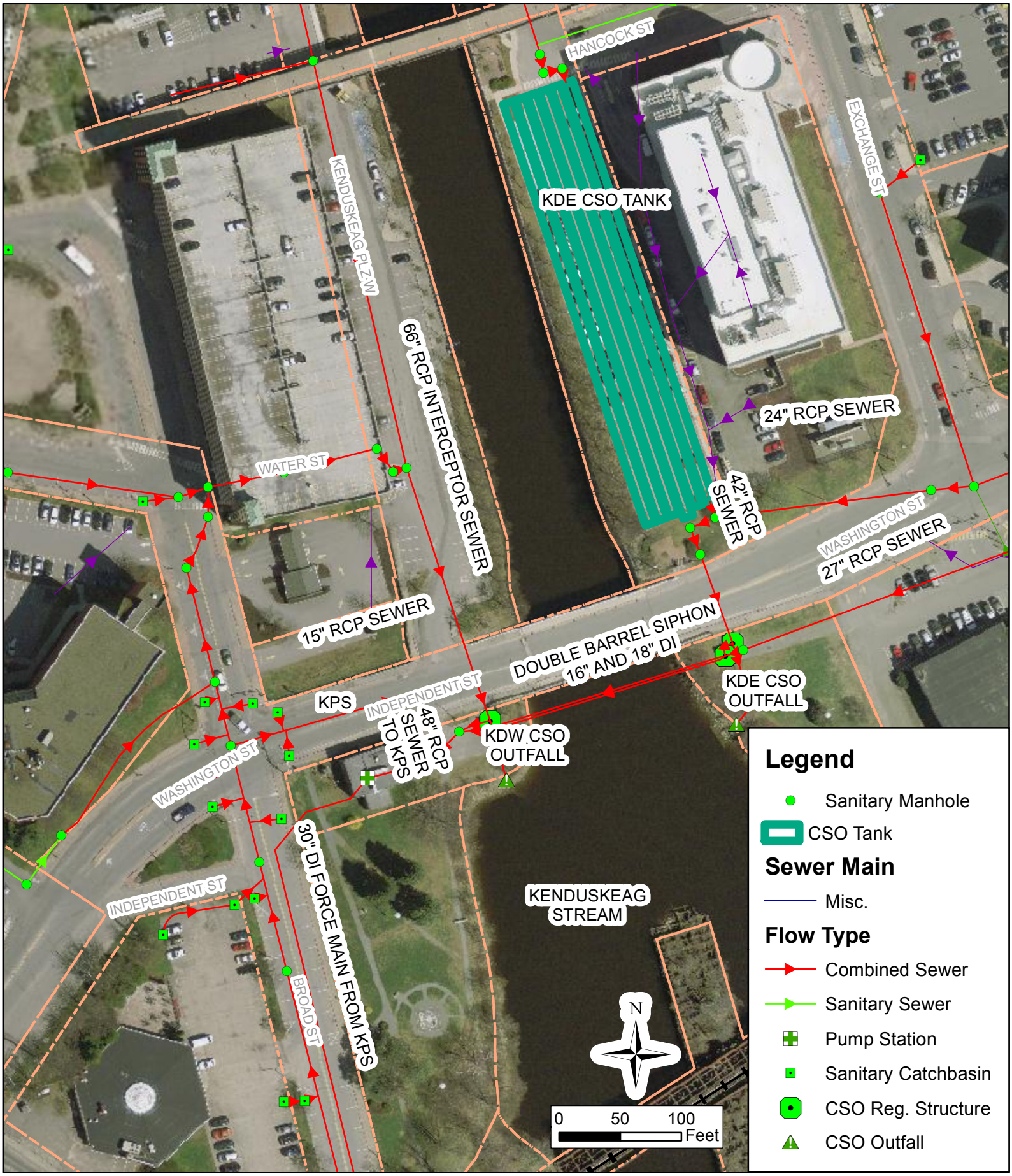

CITY OF BANGOR
SELECTED SEWER COLLECTION SYSTEM INFRASTRUCTURE
WASTEWATER TREATMENT PLANT AREA

SHOP DRAWINGS OF EXISTING EQUIPMENT LOCATED AT KPS

KPS

EIM JOB SPEC SHEET

Job No: 40587H.

Entry Form: NMT Entered: NMT 01/23/97

Customer: RODNEY HUNT CO.
P. O. No: V-5665

Rev: 002

Date: 08/06/97

P.O. Item No: 8

Project: BANGOR, ME

Valve Data

Manufacturer: RODNEY HUNT
Size: 48
Type: BFV
Torque(ft-lb): 17

Valve Stem Data

Dimensions - Inches

Diameter (inches): 1.250
Pitch (inches): .250
Lead (inches): .250
Hand: Left
Valve Opens: Up
Stroke (inches): 48.000
Turns-Full Stroke: 243.000
Stroke Time (Sec): 174
Output Rotation: CW To Close

Actuator Data

Quantity: 1
EIM Model No: 1DUA-B
Outline Dwg: 1-0001/10E
Assembly Dwg: 83640-1
83640-2
Instruction: Tech Manual
Enclosure: FM Cl I,II,III
Div.1,Grps D,E,F,G
RPM Out: 085
Torque Spring: 83464-1 Purple
Motor Gears: 34938/34937
Handwheel Gears: 34922/34543
Rim Pull Factor: 1.44
Drive Sleeve/Worm: 35519-2R 48:2R
Lubrication: Red Bentone
Nameplate: 36302-2 WP,XP (FM: C,D,E,F,
Handwheel: With 2 In. Sq. Nut

Motor Data

Horsepower: 1/2
RPM: 1725
Volts: 90 Vdc
Hertz: DC
Phase: Direct Current
Stall Amps: 30.0
Motor Part No.: 9200000007

Electrical Data

Wiring Diagram: 40587-1 REV B
M2CP Frame: 84108-4A 4T-4G (10T)
N Number: 0323
Motor Protection: Thermal Contacts in Motor
LSM: 84112-01A
Position Switches: LSC,LSO,LSA&LSB(16Contacts)
Torque Switches: TSC & TSO
Space Heater: 1500 Ohm, 25W (115V)
Pushbuttons: Open-Close
Selector Switch: Local(hand)-Off-Remote(auto
Position Lights: Close(green), Open(red)
Lamp No. 3: Power On (no lens)
TBM: 83943
Lamp No. 4: Over Torque (no lens)
ISM: 84078-6
Potentiometer: 1000 Ohm, 84057
MDPI gear assy: 84055-0323
Pot input gear: 36462-24
Pot. Input Shaft: P4042-90
Cover Assembly: 84081-02 2B,2L,SS
Circuit Breaker: 84197-16, K 16 Amps (CBM)
Control Functions: Position Seat (no G to H jumper on LSM), Maintained P.B. (no jumper 5 to 6 on TBM)
T/S Shaft Rotates: CCW To Close
Non Std. P/L Lense: Reverse lens colors
Loss Of Signal: Valve Does Not Move

Additional Accessories, Services & Notes:

Torque Switches:

Dial Setting	2	3	4	5	6	7	8	9	10
Ft-lb Output:	30	36	42	48	55	61	68	74	107

Approximate only. Actual torque requires test by dynomometer.

Notes: Futronic III multifunction required.
Customer Tag No(s)
~~BV-1~~ BV-20-1

Valve Adaption: Not Ordered From EIM
Stem Nut Tapping: By EIM (Ship 35849-082K1 With Actuator)

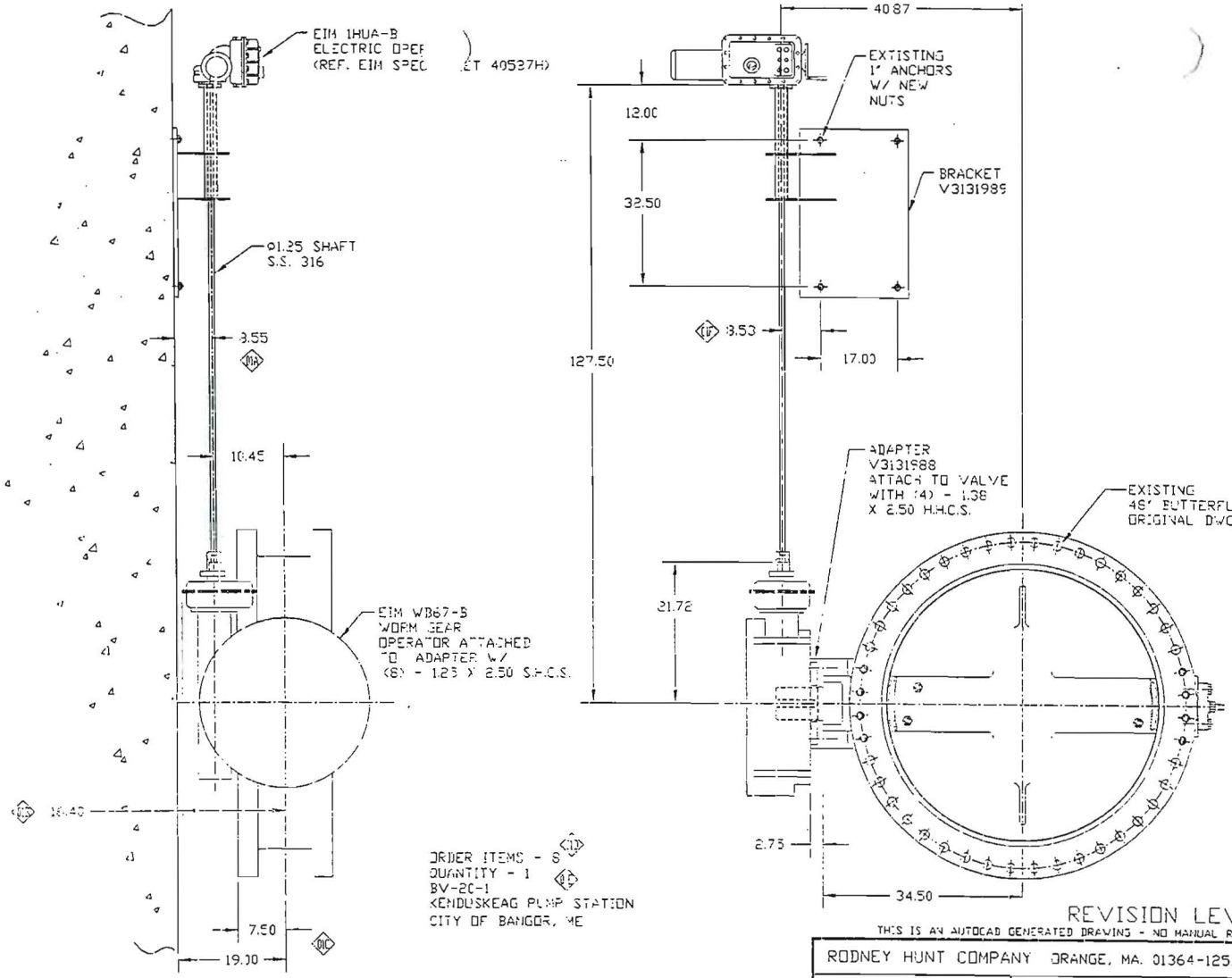

ORDER ITEMS - 8
QUANTITY - 1
BV-20-1
KENDUSKEAG PUMP STATION
CITY OF BANGOR, ME

REVISION LEVEL 01

THIS IS AN AUTOCAD GENERATED DRAWING - NO MANUAL REVISIONS ALLOWED

TOLERANCE UNLESS OTHERWISE SPECIFIED			
DEC. DIM	MACHINE	CAST	FABRICATE
1 PLACE	±0.050	±0.250	±0.250
2 PLACE	±0.030	±0.125	±0.125
3 PLACE	±0.015	±0.060	±0.060
ANGLE	±1°0'	±2°0'	

ALT	CHANGE	BY	CHK	DATE
01 A-F	8.55 WAS 9.06; 16.40 RELOCATED TO OUTSIDE OF ACTUATOR; REDIMENSIONED LOCATION OF VALVE TO WALL; WAS ORDER ITEM #7 & 8; WAS BV-1-1 & BV-20-1; 8.53 WAS 8.50	DCP		3/27/97

ALT	CHANGE	BY	CHK	DATE

RODNEY HUNT COMPANY ORANGE, MA. 01364-1251

THIS DRAWING IS THE PROPERTY OF RODNEY HUNT COMPANY ("RHC"). ACCEPTANCE OF THIS DRAWING CONSTITUTES AGREEMENT (1) THAT IT AND ANY COPIES THEREOF SHALL NOT BE TRANSMITTED OR EXHIBITED TO OTHERS; (2) THAT IT AND ANY COPIES THEREOF SHALL BE RETURNED UPON REQUEST BY RH TO RHC; AND (3) THAT THE INFORMATION APPEARING HEREON IS CONFIDENTIAL AND IS NOT TO BE DISCLOSED TO OTHERS WITHOUT FIRST OBTAINING WRITTEN PERMISSION FROM RH.

OPERATOR FOR 48" BUTTERFLY VALVE

CITY OF BANGOR, ME

DRAWN DCP	DESIGNED DJG	DATE 2/7/97
CHECKED	APPROVED	SCALE NTS
H:\DATA\VALVE\SUBMIT	ORDER NO. 76026-4	DWG. NO. V76026-G

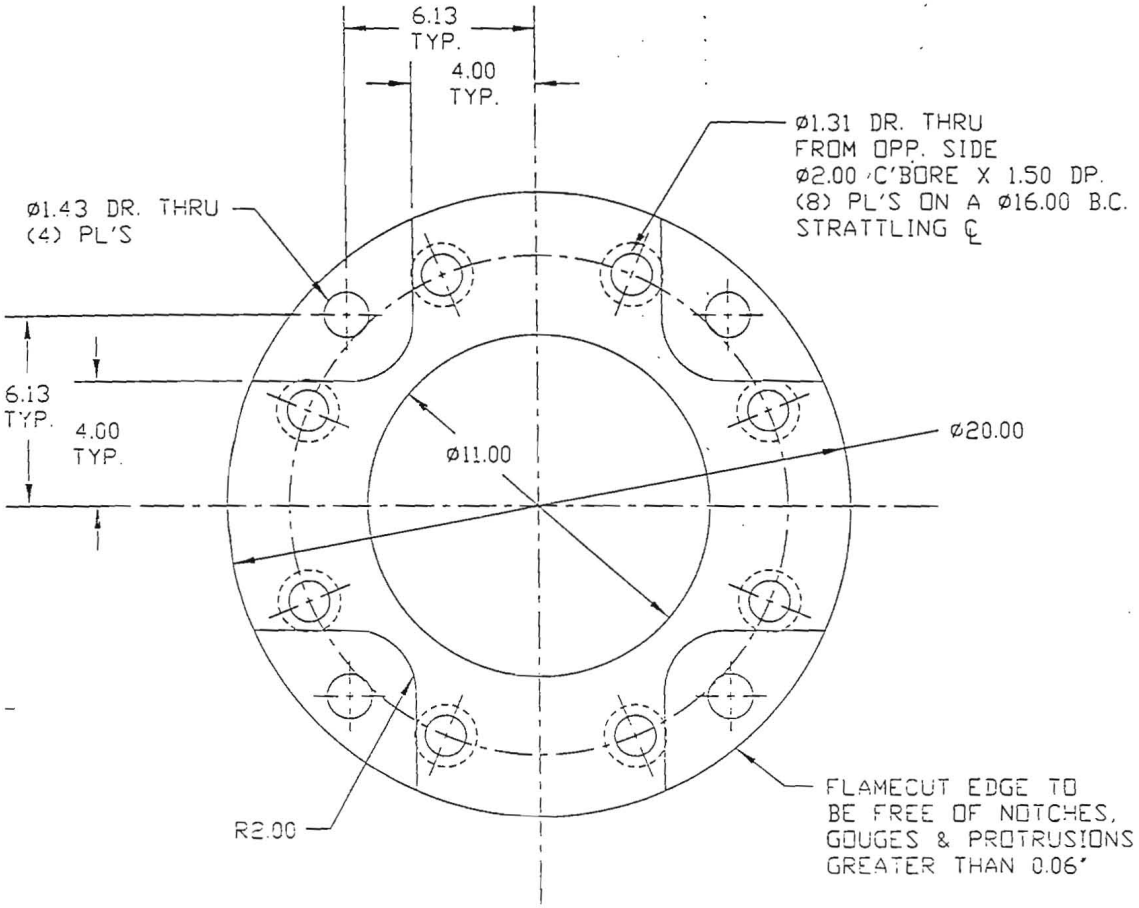

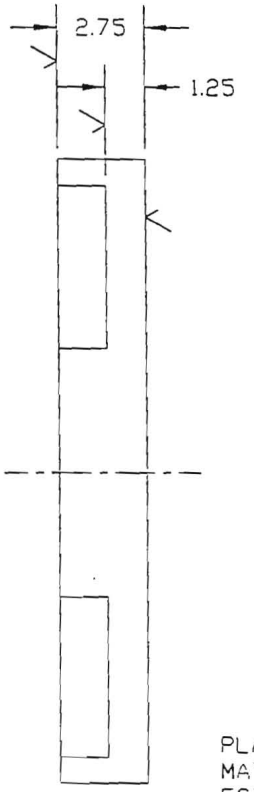

NOTES:
1.) UNLESS OTHERWISE NOTED
ALL MACH. SURF. FIN. ARE 125

2.) BREAK ALL SHARP EDGES 0.03

PLATE - 3.00 THK. X 20.00 O.D. X 11.00 I.D.
MAT'L - A.S.T.M. A36
EST. FIN. WT. - 163#
BURN OUT FILE NAME - 2595

REVISION LEVEL 00

THIS IS AN AUTOCAD GENERATED DRAWING - NO MANUAL REVISIONS ALLOWED

TOLERANCE UNLESS OTHERWISE SPECIFIED			
DEC. DIM.	MACHINE	CAST	FABRICATE
1 PLACE	±0.060	±0.250	±0.250
2 PLACE	±0.030	±0.125	±0.125
3 PLACE	±0.015	±0.060	±0.060
ANGLE	±1°0'	±2°0'	±2°0'

ALT.	CHANGE	BY	CKD	DATE

RODNEY HUNT COMPANY ORANGE, MA. 01364-1251

THIS DRAWING IS THE PROPERTY OF RODNEY HUNT COMPANY ("RH"). ACCEPTANCE OF THIS DRAWING CONSTITUTES AGREEMENT: (1) THAT IT AND ANY COPIES THEREOF SHALL NOT BE TRANSMITTED OR EXHIBITED TO OTHERS; (2) THAT IT AND ANY COPIES THEREOF SHALL BE RETURNED UPON REQUEST BY RH TO RH; AND (3) THAT THE INFORMATION APPEARING HEREON IS CONFIDENTIAL AND IS NOT TO BE DISCLOSED TO OTHERS WITHOUT FIRST OBTAINING WRITTEN PERMISSION FROM RH.

H:\DATA\VALVE\DRAWING

ADAPTER

48" BUTTERFLY VALVE TO WB67 OPERATOR

DRAWN DCP	DESIGNED DJG	DATE 2/6/97
CHECKED	APPROVED	SCALE 1 = 4
ORDER NO. 76026-4	DWG. NO. V3131988	

OTES:
) UNLESS OTHERWISE ..JTED
ALL MACH. SURF. FIN. ARE 125

.) BREAK ALL SHARP EDGES 0.03

.) FLAMECUT EDGE TO
BE FREE OF NOTCHES,
GOUGES & PROTRUSIONS
GREATER THAN 0.06'

I.) ALL MATERIAL A.S.T.M. A36 STEEL

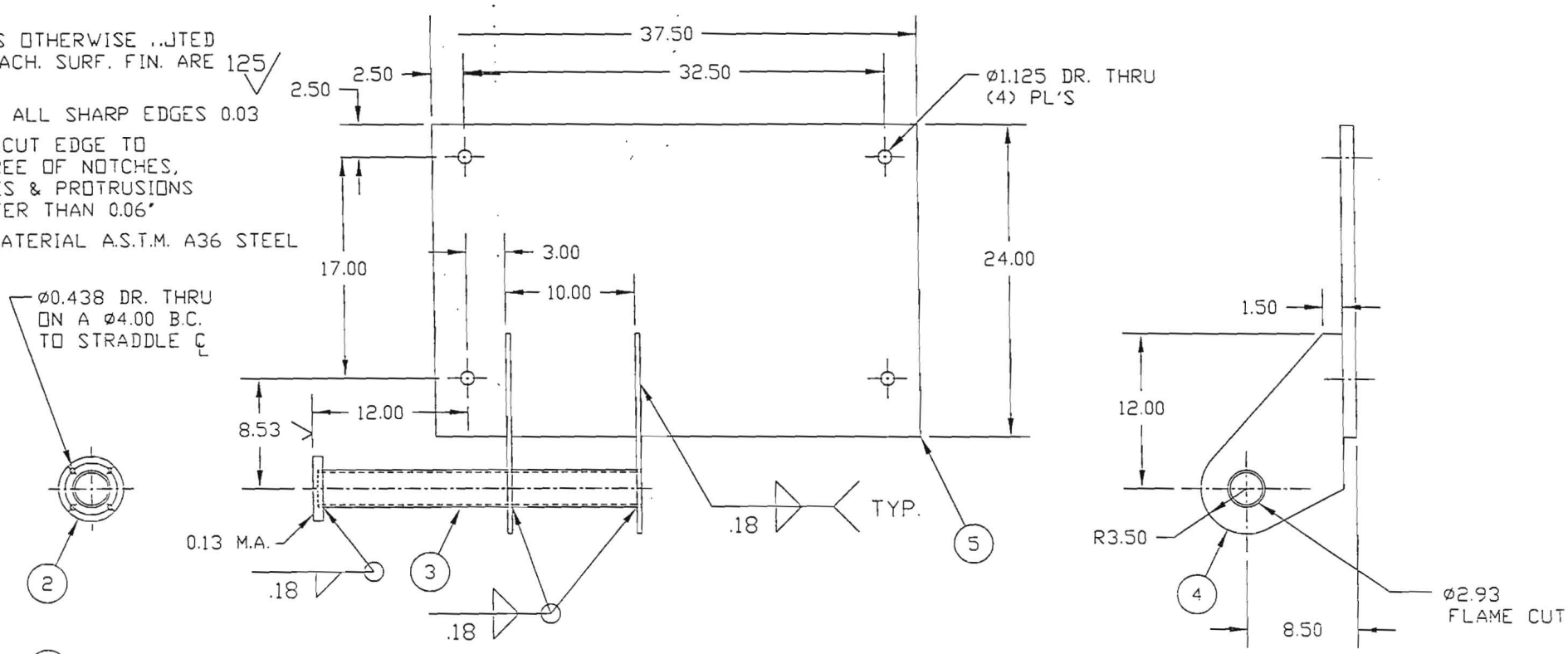

(2) PLATE - 0.75 THK. X 5.00 O.D. X 2.93 I.D.
BURN OUT FILE NAME - 2596

(3) MECH. TUBE - Ø2.50 SCH. 40 X 25.00 LG.

(4) PLATE - 0.38 THK. X 11.00 WD. X 15.50 LG..
BURN OUT FILE NAME - 2597
(2) REQ'D

(5) PLATE - 1.00 THK. X 24.00 WD. X 37.50 LG.
BURN OUT FILE NAME - 2598

EST. FIN. WT. - 285#

REVISION LEVEL 00

THIS IS AN AUTOCAD GENERATED DRAWING - NO MANUAL REVISIONS ALLOWED

TOLERANCE UNLESS OTHERWISE SPECIFIED			
DEC. DIM.	MACHINE	CAST	FABRICATE
1 PLACE	±0.060	±0.250	±0.250
2 PLACE	±0.030	±0.125	±0.125
3 PLACE	±0.015	±0.060	±0.060
ANGLE	±1°0'	±2°0'	±2°0'

ALT.	CHANGE	BY	CKD	DATE

RODNEY HUNT COMPANY ORANGE, MA. 01364-1251

THIS DRAWING IS THE PROPERTY OF RODNEY HUNT COMPANY ("RH"). ACCEPTANCE OF THIS DRAWING CONSTITUTES AGREEMENT: (1) THAT IT AND ANY COPIES THEREOF SHALL NOT BE TRANSMITTED OR EXHIBITED TO OTHERS; (2) THAT IT AND ANY COPIES THEREOF SHALL BE RETURNED UPON REQUEST BY RH TO RH; AND (3) THAT THE INFORMATION APPEARING HEREON IS CONFIDENTIAL AND IS NOT TO BE DISCLOSED TO OTHERS WITHOUT FIRST OBTAINING WRITTEN PERMISSION FROM RH

H:\DATA\VALVE\DRAWING

OPERATOR BRACKET

DRAWN DCP	DESIGNED DJG	DATE 2/7/97
CHECKED REC	APPROVED	SCALE 1 = 8
ORDER NO. 76026-4		DWG. NO. V3131989

Notes: [1] $1\frac{1}{2}$ NPT is preferred wire entry. ***CAUTION*** Conduit must enter actuator at lowest point. If hazardous location conduit must be sealed with drain type fitting.

[2] Lubrication $\frac{1}{2}$-14 NPT plugs.

[3] To move actuator to another valve, bronze stem nut P/N 35849 may be threaded up to 1.38" Acme stem max.

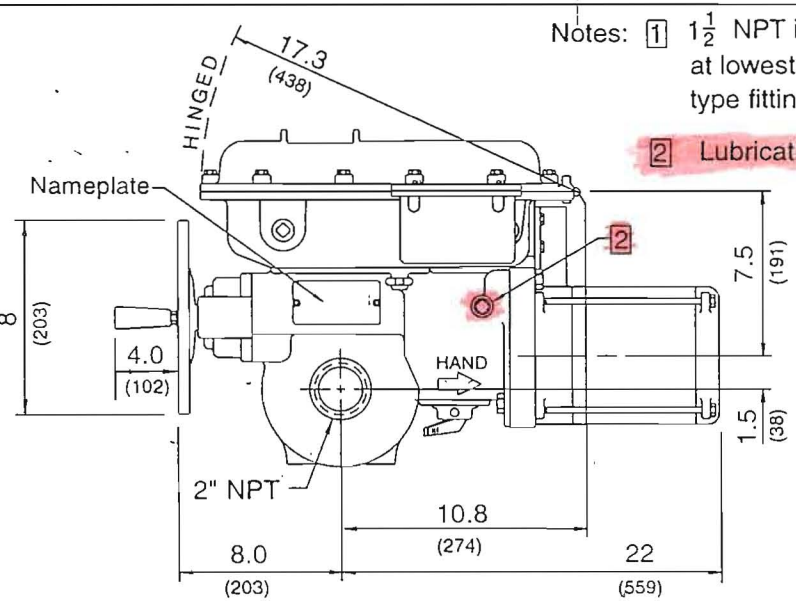

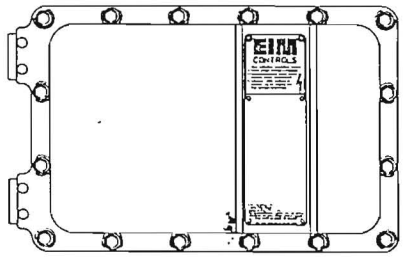

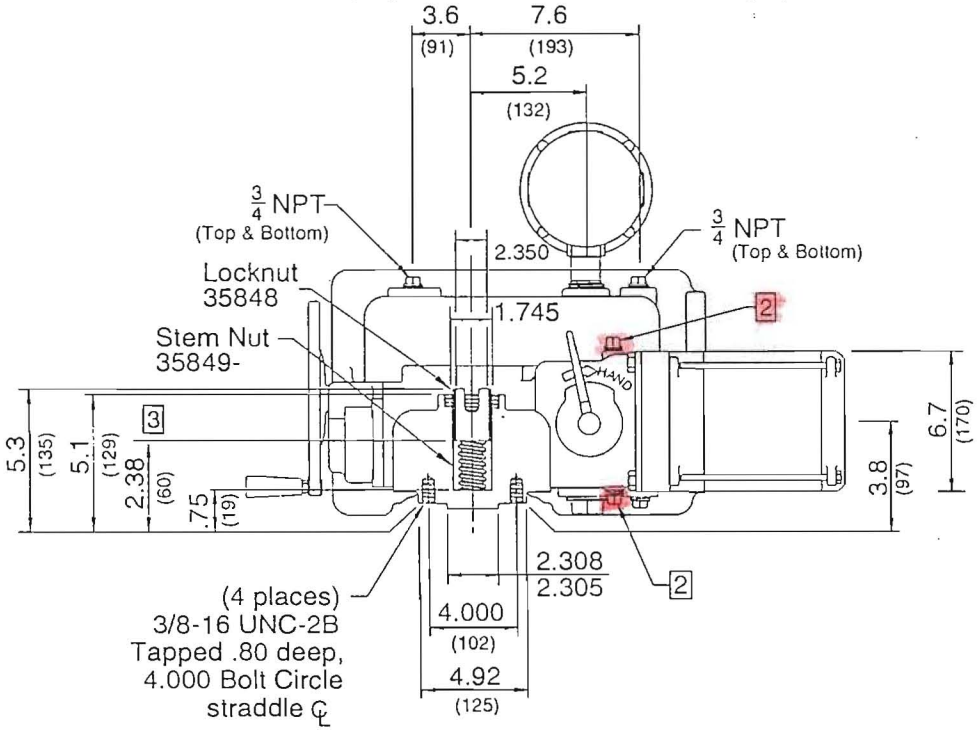

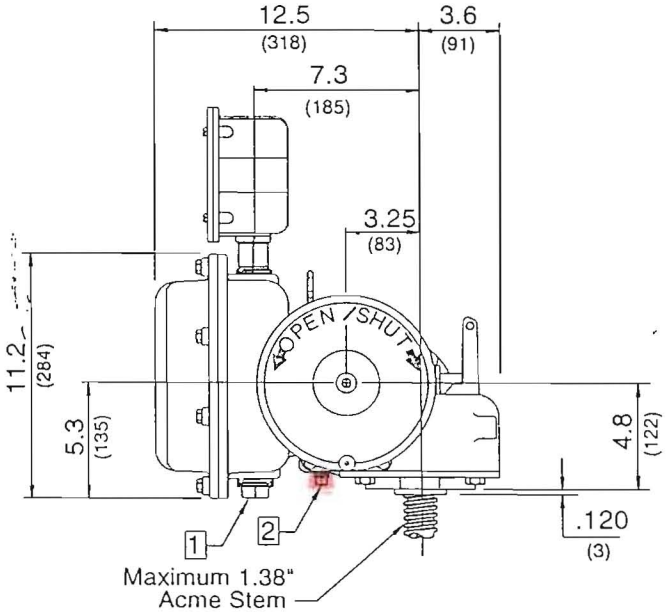

INCHES .XXX ± .005"
(MILLIMETERS) .XX ± .020"
.X APPROX.

EIM COMPANY, INC.
13840 PIKE ROAD
CONTROLS MISSOURI CITY, TX 77489

TITLE 1000 M/T 4.00

OUTLINE NO. 1-0001/10E REV A

REV	DATE	ERO	BY
A	9/1/95	9769	/CML

Notes: [1] $1\frac{1}{2}$ NPT is preferred wire entry. ***CAUTION*** Conduit must enter actuator at lowest point. If hazardous location conduit must be sealed with drain type fitting.

[2] Lubrication $\frac{1}{2}$-14 NPT plugs.

[3] To move actuator to another valve, bronze stem nut P/N 35849 may be threaded up to 1.38" Acme stem max.

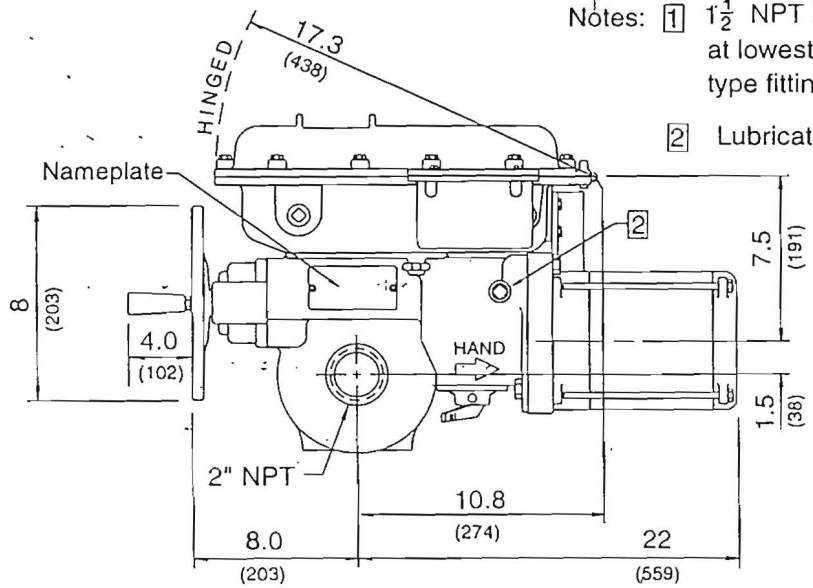

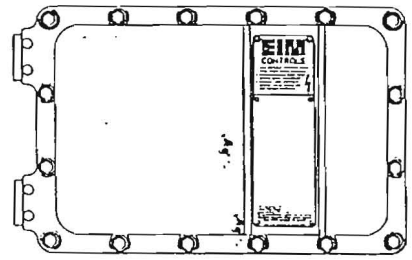

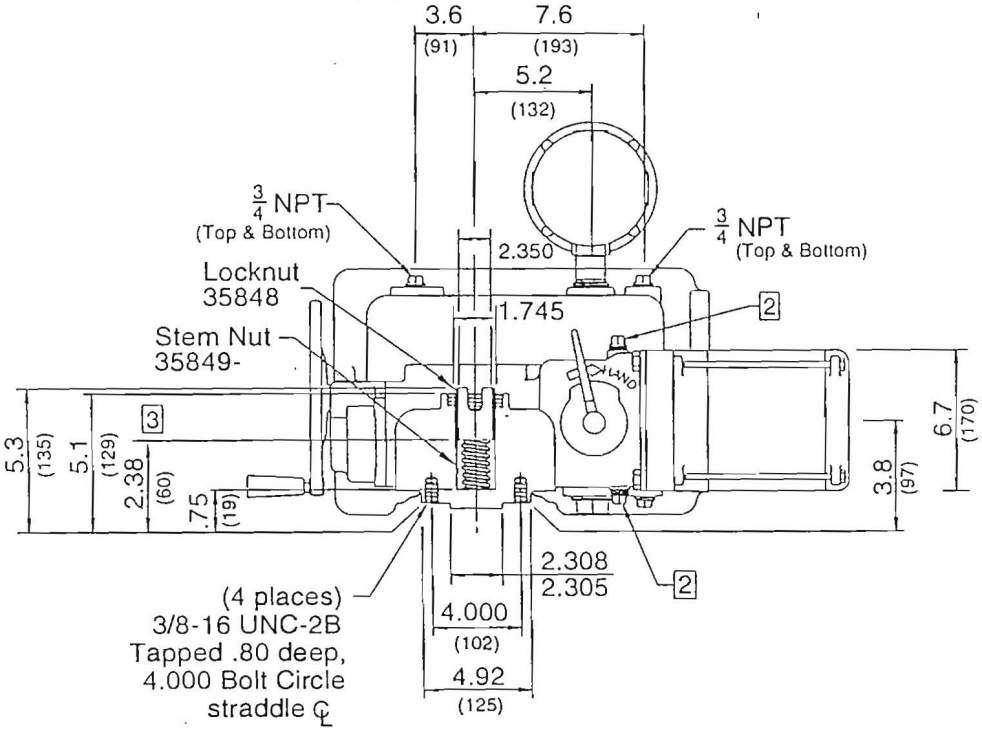

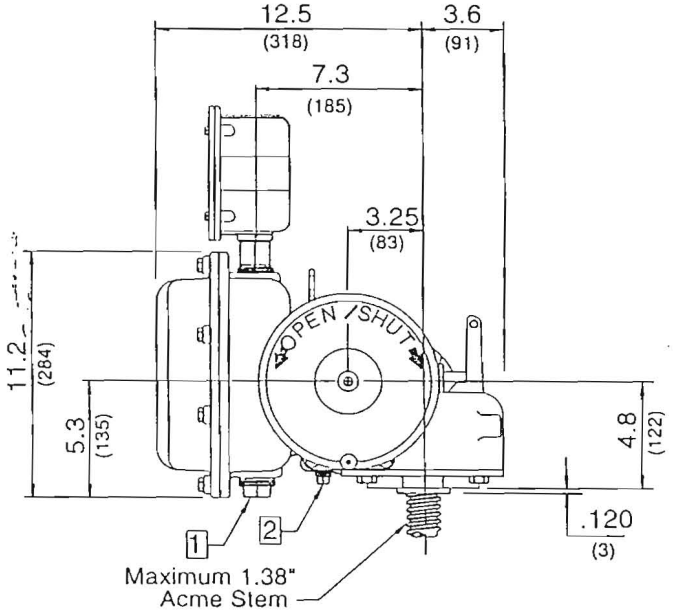

INCHES (MILLIMETERS) .XXX ± .005" .XX ± .020" .X APPROX.

EIM COMPANY, INC.
13840 PIKE ROAD
CONTROLS MISSOURI CITY, TX 77489

TITLE 1000 M/T 4.00

REV	DATE	ERO	BY
A	9/1/95	9769	/CML

OUTLINE NO. 1-0001/10E REV A

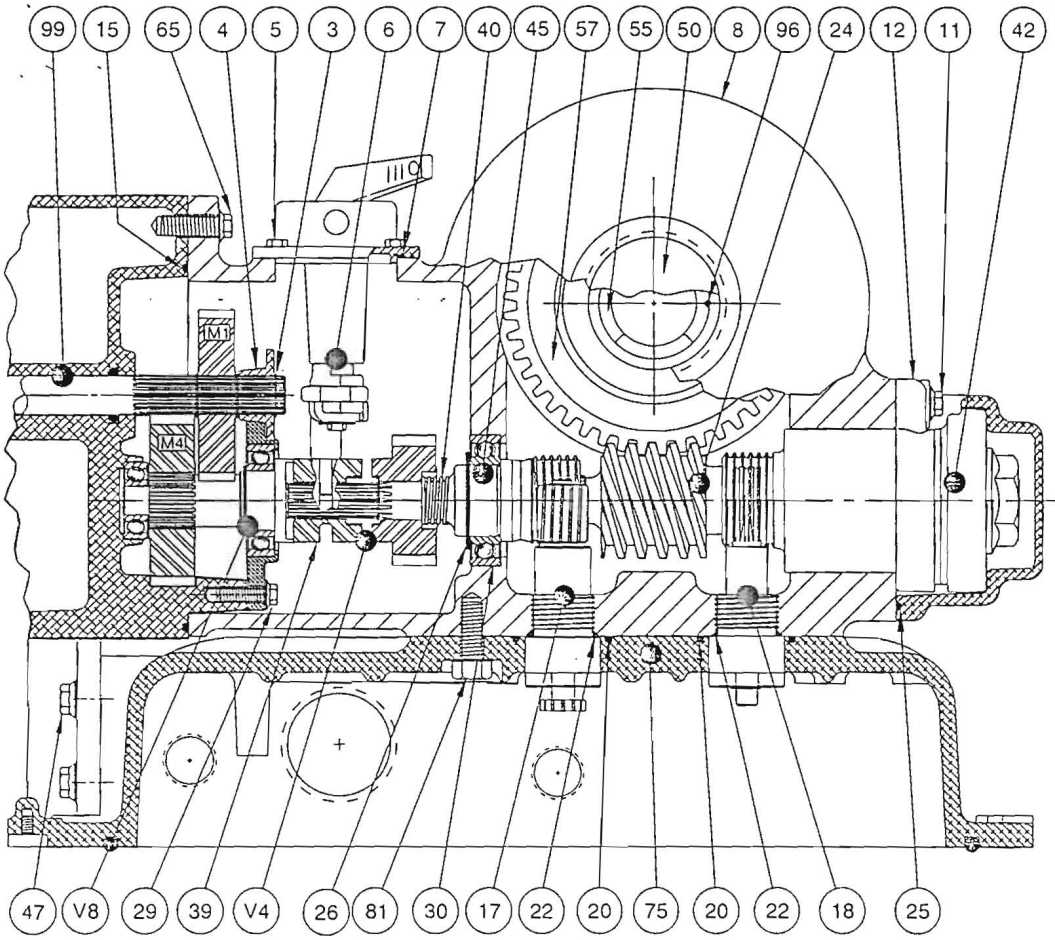

Item	Qty	Code	Part No.	Description
V4	1	CB10	P3460-	★ H/W GEAR PARTS
V8	1	CB15	83638-	★ MTR GEAR RTN ASSY
M1	1	SO15	-	★ MTR GEAR
M2	1	SO15	-	★ MTR GEAR
M3	1	SO15	-	★ MTR GAER
M4	1	SO15	-	★ MTR GEAR

P1000-1 1000 BASIC PARTS

Item	Qty	Code	Part No.	Description
3	4	R001	4060001059	RTN 5100-59
4	1	CA01	35735	56 CLUTCH CAM
5	3	S10/3	34094	THWS 10-24 X .48
6	1	CB01	83339	P/S CLUTCH ASSY
7	1	SE01	4045203317	O-RNG 568-033-70D
8	1	CI03	35505-1	MAIN HOUSING
9	3	S011	3000600885	PLUG 1/2 NPT
11	4	S12/6	4042520000	HHWLCS 3/8-16 X 1.25
12	1	CA01	34873	TORQUE SPRING CVR
15	1	SE01	4045216317	O-RNG 568-163-70D
17	1	CB02	83730	G/L PINION ASSY
18	1	CB02	83729	TQ LIMIT GEAR ASSY
20	2	SE01	4045212817	O-RNG 568-128-70D
22	2	SE01	4045202117	O-RNG 568-021-70D
23	1	SE01	4045222817	O-RNG 568-228-70D
24	1	CB03	P3643-	★ WORM ASSEMBLY
25	1	SE01	4045215417	O-RNG 568-154-70D
29	3	S12/4	4042520020	HHWLCS 1/4-20 x 1.00"
31	1	SE01	4045222817	O-RNG 568-228-70D
33	1	BR06	35009	FLANGED BEARING
34	1	CB04	83422	H/W SHAFT ASSY
36	1	CB05	83787-8	★ HANDWHEEL ASSY
41	1	CI03	35506-	★ MOUNTING BASE
42	1	CB06	P3439-	★ TORQUE SPG PARTS
43	2	B002	4000500114	THRUST/BRG CONE
44	2	B002	4000500113	THRUST/BRG CUP
45	1	CB07	83631	CLUTCH SHAFT ASSY
47	5	S12/4	4042520012	★ HHWLCS 1/4-20 X .75
49	1	R002	4060012059	RTN 5108-59 SS
50	1	P003	3000603156	2" NPT TEMP PLUG
52	1	S012	4101801814	STEM NUT KEY
54	1	BR01	35849	★ STEM NUT
55	1	CI03	35848	STEM NUT LOCKNUT
56	1	SE01	4045205017	O-RNG 568-050-70D
57	1	BR02	35519-	★ DRIVE SLEEVE (2 PC)
62	2	S12/6	4042520008	HHWLCS 3/8-16 x 2.0
65	2	S12/6	4042520000	HHWLCS 3/8-16 x 1.25
66	1	S22/6	4042209315	SHSS 3/8-16 x 1/2
75	1	CB08	83741	★ MCP BASE ASSY
76	1	CB08	83768-	★ MCP ELECTRIC CVR
81	4	CB17	35890	HHC-N-S 3/8-16 X 1.0
96	1	PS01	4043000071	LOCKNUT SPRING PIN
97	4	S16/8	4042520013	HHWLCS 1/2-13 X .75
99	1	CB09	P3803-	★ MOTOR ASSEMBLY

Notes:

1) ★ Variable Parts:
   Refer to EIM JOB SPEC SHEET for specific parts for each actuator serial number.

2) Code is Material Description and is not required for ordering of spare or maintenance parts.

EIM COMPANY, INC.
13840 PIKE ROAD
CONTROLS MISSOURI CITY, TX 77489

DWN LHE/CL | ORIG DATE 4/11/88 | APRD | REVISED DATE 9/2

Assembly Drawing

DESCRIPTION TYPE 1000 - BASIC

PAGE 1 | NUMBER 83640 | REV N

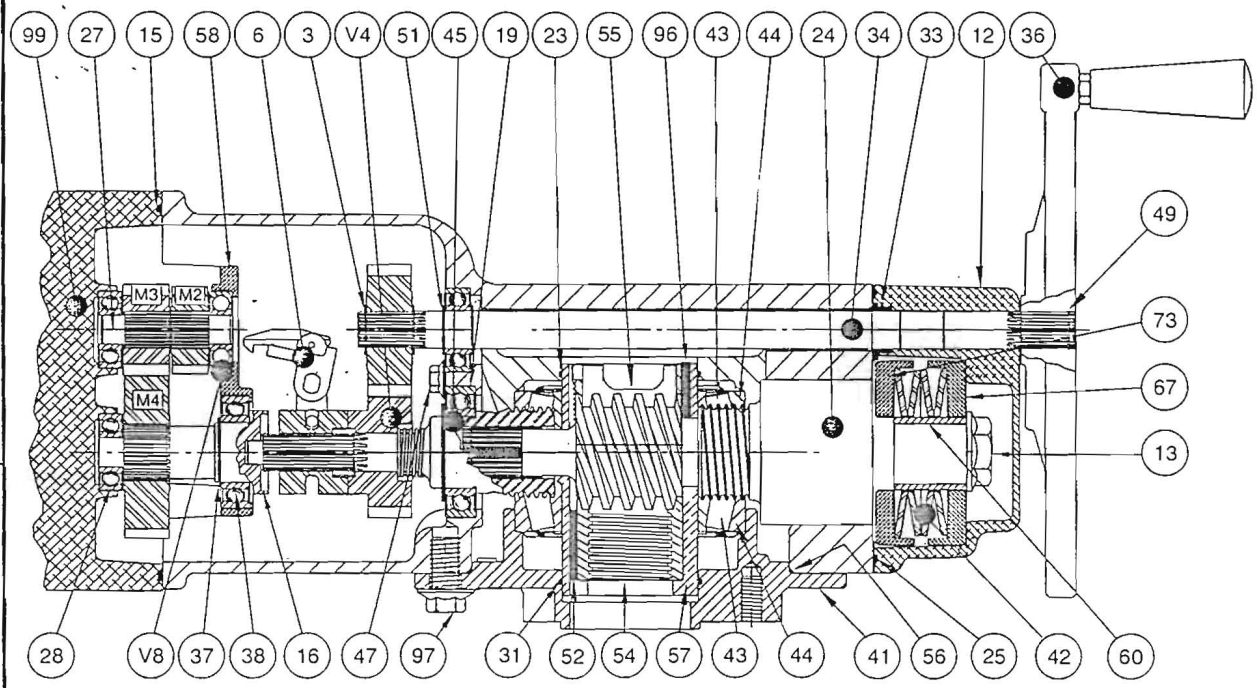

Assembly Notes:

Bolting between EIM actuator and valve flange are subject to fatigue from dynamic loading. The importance of proper screw pre-loading during assembly of valve and actuators cannot be over-emphasized. Proper pre-loading greater than the external load will usually eliminate the possibility of fatigue failure. For this reason, tighten screws or bolts to 75% pre-load of the induced tension at screw yield. Bolts should be similar to Socket Head Cap Screws, high grade alloy steel, heat-treated and tempered, 170,000 psi tensile strength min. Mounting bolts should be lightly oiled.

Mounting bolts for -10, 4.00" Bolt Circle shall be 3/8-16 UNC. The tightening torque shall be 50 ft-lb.

Mounting bolts for -03, 3.25" Bolt Circle shall be 5/16-18 UNC. The tightening torque shall be 27 ft-lb.

P1-00-48/03 1000 48:1R 3.25"

Part No.	Description
P1000-1	1000 BASIC PARTS
35519-1R	1000 48:1R DR/SLV
P3643-4	1-L RH WORM ASSY
35506-03	1000 3.25/03 BASE

P1-00-24/03 1000 48:2R 3.25"

Part No.	Description
P1000-1	1000 BASIC PARTS
35519-2R	1000 48:2 DR/SLV
P3643-2	2-L RH WORM ASSY
35506-03	1000 3.25/03 BASE

P1-00-12/03 1000 48:4R 3.25"

Part No.	Description
P1000-1	1000 BASIC PARTS
35519-4R	1000 48:4R DR/SLV
P3643-5	4-L RH WORM ASSY
35506-03	1000 3.25/03 BASE

P1-00-48/10 1000 48:1R 4.00"

Part No.	Description
P1000-1	1000 BASIC PARTS
35519-1R	1000 48:1R DR/SLV
P3643-4	1-L RH WORM ASSY
35506-10	1000 4.00/10 BASE

P1-00-24/10 1000 48:2R 4.00"

Part No.	Description
P1000-1	1000 BASIC PARTS
35519-2R	1000 48:2 DR/SLV
P3643-2	2-L RH WORM ASSY
35506-10	1000 4.00/10 BASE

P1-00-12/10 1000 48:4R 4.00"

Part No.	Description
P1000-1	1000 BASIC PARTS
35519-4R	1000 48:4R DR/SLV
P3643-5	4-L RH WORM ASSY
35506-10	1000 4.00/10 BASE

EIM COMPANY, INC.
CONTROLS
13840 PIKE ROAD
MISSOURI CITY, TX 77489

DWN LHE/CL | ORIG DATE 4/11/88 | APRD | REVISED DATE 9/2

Assembly Drawing

DESCRIPTION TYPE 1000 - B/M

PAGE 2 | NUMBER 83640 | REV N

EIM JOB SPEC SHEET

Job No: 40587G

Entry Form: NMT Entered: NMT 01/23/97

Customer: RODNEY HUNT CO.
P. O. No: V-5665

Rev: ORG

Date: 02/10/97

P.O. Item No: 7

Project: BANGOR, ME

Valve Data

Manufacturer: RODNEY HUNT
Size: 48
Type: BFV
Torque(ft-lb): 5000

Actuator Data

Quantity: 2
EIM Model No: WB67-B
Outline Dwg: 72233-B
Assembly Dwg: 83833
Lubrication: Red Bentone
Nameplate: 35758
Handwheel: None - 2" Sq. Nut

Electrical Data

Valve Stem Data

Dimensions - Inches
Diameter (inches): 5.625
Key: (1) 0.001 X 0.001
Output Rotation: CW To Close

Motor Data

Additional Accessories, Services & Notes:

Notes: Customer Tag No(s)
Manual
Valve Adaption: Not Ordered From EIM
Bore & Key Bushing: By EIM (Ship 35761- With Actuator)

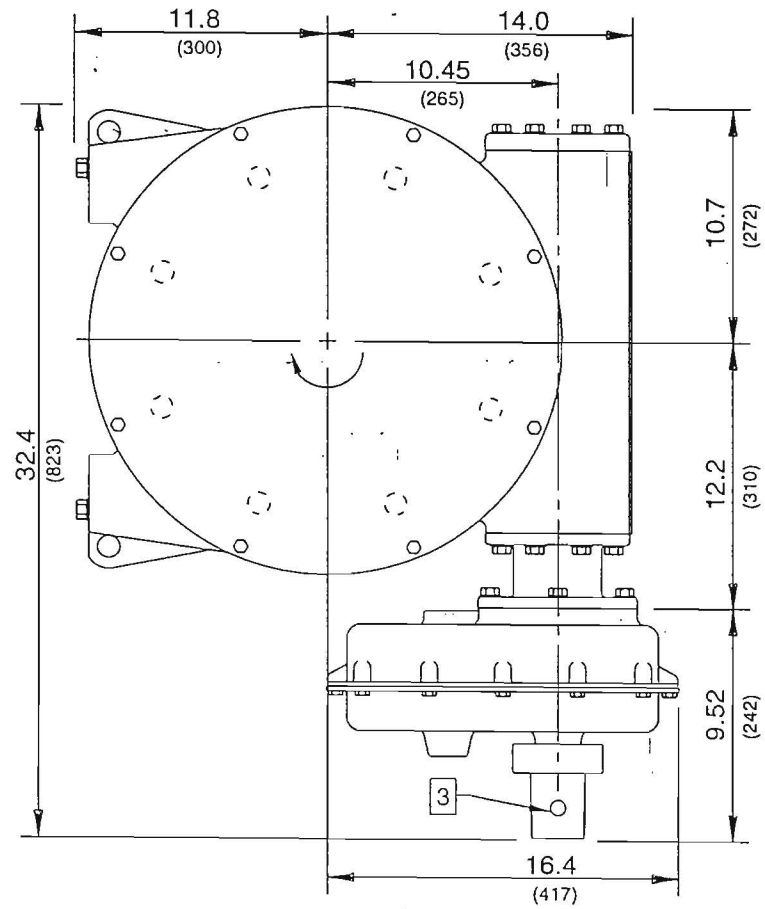

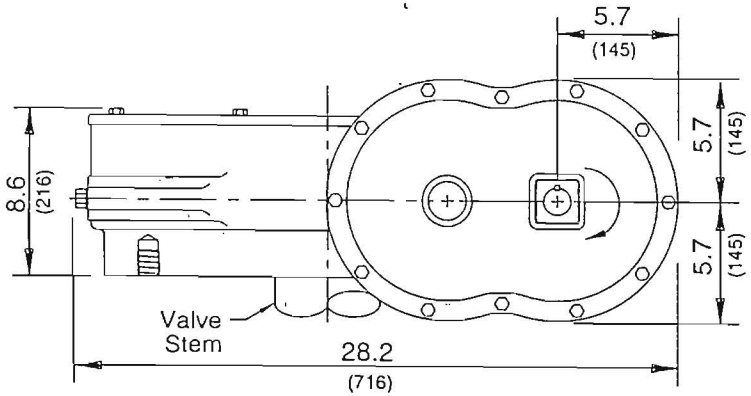

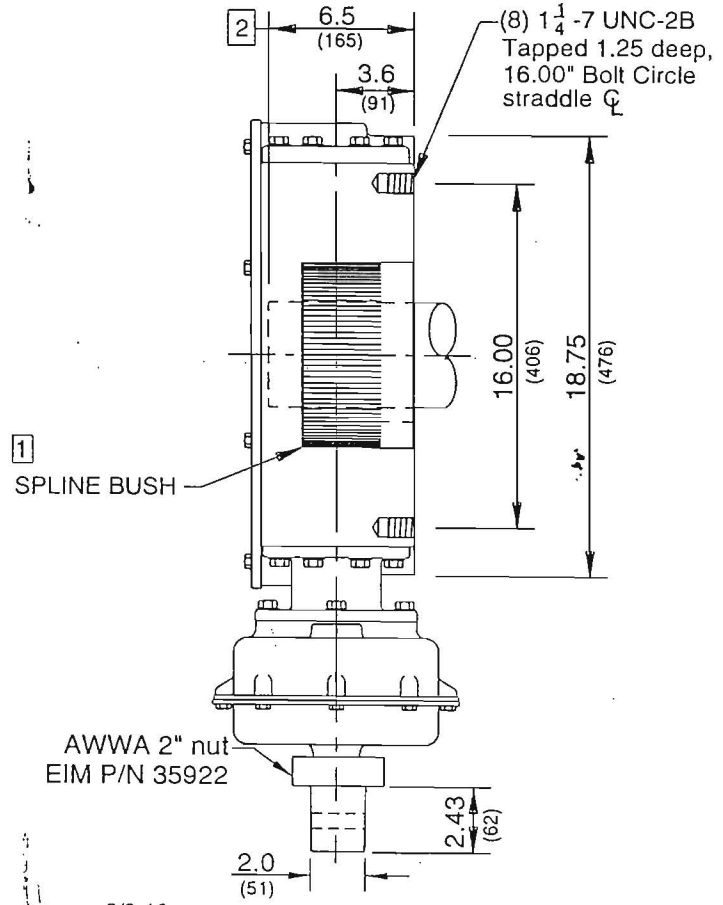

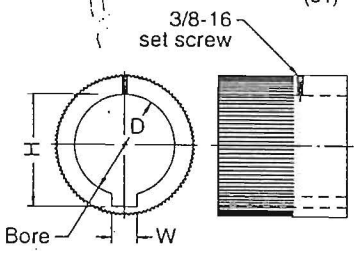

SPLINE BUSH

1 Spline Bush: Removable from the bottom of actuator. Refer to EIM Job Spec sheet for Bushing furnished for specific application.

2 Maximum Valve Stem Length

3 Stainless Steel Pin 3/8 X 2.00 EIM P/N 4043002073

4) Approximate Weight 595 lbs.

INCHES .XXX ± .005"
(MILLIMETERS) .XX ± .020"
.X APPROX.

Special Note: Industry standards for manual actuators generally require Clockwise (CW) rotation of handwheel to close valve with Clockwise (CW) rotation of valve shaft. EIM Model WB67-B has CW rotation of actuator input shaft for CW rotation of valve input shaft.

REV	DATE	ERO	BY
G	3/18/92	7790	CML

EIM COMPANY, INC.
13840 PIKE ROAD
CONTROLS MISSOURI CITY, TX 77489

WB67-B 16.00"

OUTLINE NO. 72233-B REV G